VERS-DROP-SK (10) FOR WARM DIM APPLICATIONS

24VDC Linear Fixtures - Suspended

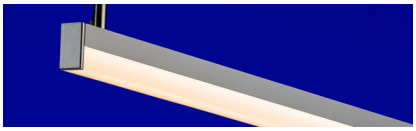

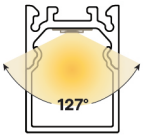

- 80 Suspension Kit configurations allow fixture to be seamlessly incorporated into any interior
- Create long, continuous lines of light with easy-to-use inline bracket connectors
- The lens sits proud of the fixture, allowing the most LED light engine options of any VERSatile fixture
- The lens creates a slim decorative line of light along the edge of the fixture
- Features integrated metal endcaps and durable anodized aluminum housings
- White Optics, an internal coating that results in greater lumen output, comes standard in all VERS fixtures.
- Consult factory for field assembly options

1 PRODUCT	2 WATTS/ FT	3 CCT	4 RATED	5 LENS	6 EXTERNAL LOUVER	7 WIRE INPUT/ OUTPUT	8 CONNECTOR/ WIRE IN	9 CONNECTOR/ WIRE OUT	10 WIRE COLOR	11 WIRE TYPE	12 MOUNTING	13 FINISH	14 LENGTH (IN)	15 EXACT/ OPTIMAL
					N/A	S2	BW	CLS	SV	AWM	SK			

Sample Part Number: **VERS-10-SK-WD-6.0-19/30-DRY-DF-N/A-S2-BW-CLS-SV-AWM-SK-WH-48"-E**

1 PRODUCT

VERS-10-SK-WD

LED engine is built with 2 wires suitable for phase dimming control.
See following pages for compatible power supplies.

VERS-10-SK-DW
VERS-10-SK-DW-USA

Select USA option for BAA and BABA projects. Only DRY ratings apply.

LED engine is built with 3 wires requiring 0-10v, DMX or DALI control. Using DALI, DMX, or non QTL power supplies may double watts/ft. See last page for compatible power supplies.

2 WATTS/FT

6.0 6.0W/ft

1.5HE 1.5W/ft HE
2.5HE 2.5W/ft HE
4.0HE 4.0W/ft HE

1.5HE 1.5W/ft HE
2.5HE 2.5W/ft HE

3 CCT

19/27 1900K/2700K
19/30 1900K/3000K

20/27 2000K/2700K
20/30 2000K/3000K
27/40 2700K/4000K
27/55 2700K/5500K

24/30 2400K/3000K
27/40 2700K/4000K

4 RATED

DRY IP20

DRY IP20

DMP IP54

5 LENS

DF Diffused
PR Polar

For representation of LED visibility, see Diode Visibility section on following pages.
For beam angles, see Photometric Performance section on following pages.

6 EXTERNAL LOUVER

N/A No Louver

7 WIRE INPUT/OUTPUT

S2 Single 2 (Input only) - Bottom Feed

8 CONNECTOR/WIRE IN

BW Bare Wire (Standard 36")

BW: Standard length is 36", max length is 120". Request custom length by writing in part number next to BW (example: BW48)

9 CONNECTOR/WIRE OUT

CLS Closed End (No feed)

BW: Standard length is 36", Max length is 120". Request custom length by writing in part number next to BW (example: BW48)

10 WIRE COLOR

SV Silver

11 WIRE TYPE

AWM Appliance Wiring Material

12 MOUNTING

SK Suspension Bracket

13 FINISH

ST Satin
BK Black
BZ Bronze
WH White
CU Custom

Custom finishes have longer lead times. Non-RAL 9003 whites custom.

14 LENGTH (IN)

Minimum length is 12", maximum length is 98" not including end caps. Contact us for lengths under 12".

15 EXACT/OPTIMAL

O Optimal Illumination
E Exact Specified Length

Exact fixtures match the exact length you specify, but they may have dim spots at the ends. Optimal fixtures are slightly shorter than the length specified, but provide full illumination from end to end. See Exact/Optimal Fixture Length charts.

© 2026 QTL. All rights reserved | 155 Hill St. Milford, CT 06460 | 203-367-8777 | sales@QTL.lighting | www.QTL.lighting

Specification subject to change. Rev-01-13-26

5 year warranty | Warranty only valid with QTL power supplies | Field modifications void warranty | Data subject to change, all data has +/- 5% tolerance

VERS-DROP-SK (10) FOR WARM DIM APPLICATIONS

24VDC Linear Fixtures - Suspended

1 PRODUCT - DIMENSIONS

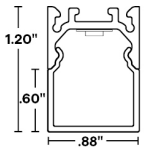

Profile with lens

2 DELIVERED LUMENS

[Calculated L70 = 70000 hrs]
Tested with VERS-10-SK-DW-**-DRY

	2.5HE W/FT									
	2000K		2700K		3000K		4000K		5500K	
	LM/FT	CRI	LM/FT	CRI	LM/FT	CRI	LM/FT	CRI	LM/FT	CRI
PR	172	93	185	98	205	98	206	97	218	97
DF	161	93	176	98	193	98	195	98	203	97

5 DIODE VISIBILITY

DF - Diffused lens

PR - Polar lens

PHOTOMETRIC PERFORMANCE

Nominal beam spread shown, beam spread varies based on light engine. For more detailed information, see photometric data.

6.0W/ft Diffused lens

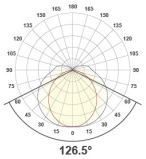

TEMPERATURE RATINGS

				DW 1.5 HE W/FT		DW 3.0 HE W/FT		DW 2.5 HE W/FT		DW 5.0 HE W/FT	
		WD 6.0 W/FT		QTL power supply other than DALI, DMX		DALI, DMX, or non-QTL power supply		QTL power supply other than DALI, DMX		DALI, DMX, or non-QTL power supply	
		Min	Max	Min	Max	Min	Max	Min	Max	Min	Max
DRY	Ambient Operating Temp - Surface	-4°F	115°F	-4°F	145°F	-4°F	135°F	-4°F	135°F	-4°F	120°F
DMP	Ambient Operating Temp - Surface	—	—	-4°F	140°F	-4°F	130°F	-4°F	130°F	-4°F	115°F
WET	Ambient Operating Temp - Surface	-4°F	110°F	-4°F	140°F	-4°F	130°F	-4°F	130°F	-4°F	115°F

© 2026 QTL. All rights reserved | 155 Hill St. Milford, CT 06460 | 203-367-8777 | sales@QTL.lighting | www.QTL.lighting

VERS-DROP-SK (10) FOR WARM DIM APPLICATIONS

24VDC Linear Fixtures - Suspended

7 WIRE INPUT/ OUTPUT

SINGLE (Input only)

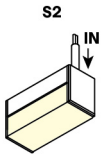

CONFIGURATION OPTIONS

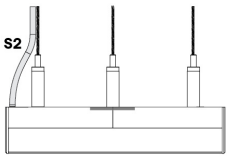

Single Feed

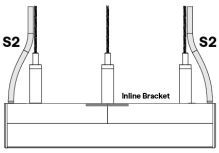

Continuous Row End Feeds

8 / 9 CONNECTOR/WIRE – IN/OUT

Connector/Wire In or Out not needed to specify product.

BW
For WD

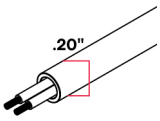

Bare Wire 36" | 22 AWG
Clear outer jacket, metal shield

BW
For DW-HE

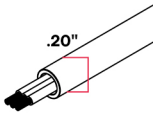

Bare Wire 36" | 22 AWG
Clear outer jacket, metal shield

10 WIRE COLOR

Silver

12 MOUNTING

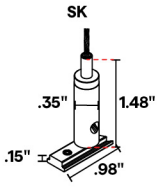

Suspension Bracket

2 required up to 6' lengths; additional support required between 6' to 8'

13 FINISH

Satin

Black

Bronze

White

Custom finishes require a longer lead time, consult factory

© 2026 QTL. All rights reserved | 155 Hill St. Milford, CT 06460 | 203-367-8777 | sales@QTL.lighting | www.QTL.lighting

VERS-DROP-SK (10) FOR WARM DIM APPLICATIONS

24VDC Linear Fixtures - Suspended

15 EXACT/OPTIMAL FIXTURE LENGTH

E/O Length Calculator → E/O Explained →

Exact fixtures are the exact length specified. Optimal fixtures' length is rounded down based on LED cut points to allow the fixture to be illuminated end to end. For runs with multiple fixtures that need to fill a specific length, it's recommended to order all optimal fixtures with an exact fixture at the end of the run.

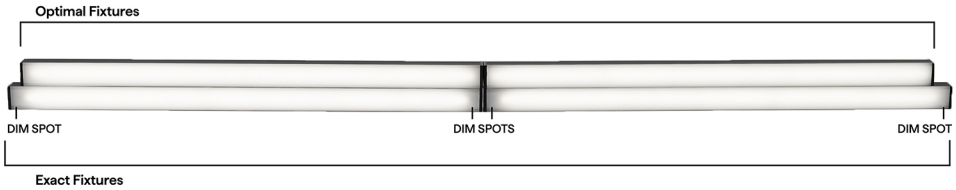

WD DRY LENGTHS BY INCH

EXACT LENGTH

Requested Length	Potential dim spot on either end of a S1 fixture 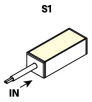 End Feed
12"	1"
13"	0.5"
14"	1"
15"	0.5"
16"	1"
17"	0.5"
18"	1"
19"	0.5"
20"	1"
21"	0.5"
22"	1"
23"	0.5"
24"	1"
36"	1"
48"	1"
60"	1"
72"	1"
84"	1"
96"	1"

OPTIMAL LENGTH

Requested Nominal Length	S2 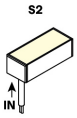 Bottom Feed
12"	11.51"
13"	12.51"
14"	13.51"
15"	14.51"
16"	15.51"
17"	16.51"
18"	17.51"
19"	18.51"
20"	19.51"
21"	20.51"
22"	21.51"
23"	22.51"
24"	23.51"
36"	35.51"
48"	47.51"
60"	59.51"
72"	71.51"
84"	83.51"
96"	95.51"

© 2026 QTL. All rights reserved | 155 Hill St. Milford, CT 06460 | 203-367-8777 | sales@QTL.lighting | www.QTL.lighting

VERS-DROP-SK (10) FOR WARM DIM APPLICATIONS

24VDC Linear Fixtures - Suspended

DW-HE DRY DMP LENGTHS BY INCH

EXACT LENGTH

Requested Length	Potential dim spot on either end of a S1 fixture 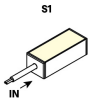 End Feed
12"	1"
13"	0.5"
14"	1"
15"	0.5"
16"	1"
17"	0.5"
18"	1"
19"	0.5"
20"	1"
21"	0.5"
22"	1"
23"	0.5"
24"	1"
36"	1"
48"	1"
60"	1"
72"	1"
84"	1"
96"	1"

OPTIMAL LENGTH

Requested Nominal Length	S2 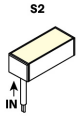 Bottom Feed
12"	11.41"
13"	12.41"
14"	13.41"
15"	14.41"
16"	15.41"
17"	16.41"
18"	17.41"
19"	18.41"
20"	19.41"
21"	20.41"
22"	21.41"
23"	22.41"
24"	23.41"
36"	35.41"
48"	47.41"
60"	59.41"
72"	71.41"
84"	83.41"
96"	95.41"

COMPATIBLE POWER SUPPLIES

See power supplies cut sheets for more information. Data subject to change, all data has +/- 5% tolerance.

DIM TO LEVEL	INDOOR	
	DW-HE Warm Dim Applications	WD
0.1%	QT-CAB-eLED+DALI-DT6 QT-CAB-eLED+DALI-DT8 QT-CAB-eLED+DALI-DT8-AWN QT-CAB-eLED+WD QT-CAB-eLED+WD-AWN QTM-eLED+DALI-DT6 QTM-eLED+DALI-DT8 QTM-eLED+DALI-DT8-AWN QTM-eLED+WD QTM-eLED+WD-AWN QZ-DW	QT-CAB-QZ-PH/0-10V QT-CAB-eLED+0-10V QT-CAB-eLED+DALI-DT6 QT-CAB-eLED+DALI-DT6-AWN QTM-eLED+0-10V QTM-eLED+DALI-DT6 QTM-eLED+DALI-DT6-AWN QZ-BOWTIE+DIMMER QZ-DMX QZ-PH/0-10V QZ-STICK-PH/0-10V QZLP
1%	QZ-DALI-DT8	QTM-eLED(E) QZ-DALI-DT6
10%	Non-Dim Power Supply with WD App Dongle	Non-Dim Power Supply with SW App Dongle

© 2026 QTL. All rights reserved | 155 Hill St. Milford, CT 06460 | 203-367-8777 | sales@QTL.lighting | www.QTL.lighting

VERS-DROP-SK (10) FOR WARM DIM APPLICATIONS

24VDC Linear Fixtures - Suspended

DIMMING PROTOCOL	INDOOR	
	DW-HE Warm Dim Applications	**WD**
Phase	QZ-DW	QT-CAB-QZ-PH/0-10V QTM-eLED(E) QZ-BOWTIE+DIMMER QZ-PH/0-10V QZ-STICK-PH/0-10V QZLP
0-10V	QT-CAB-eLED+WD QT-CAB-eLED+WD-AWN QTM-eLED+WD QTM-eLED+WD-AWN QZ-DW	QT-CAB-QZ-PH/0-10V QT-CAB-eLED+0-10V QTM-eLED+0-10V QZ-PH/0-10V QZ-STICK-PH/0-10V QZLP
Lutron Athena	QT-CAB-eLED+DALI-DT8-AWN QT-CAB-eLED+WD-AWN QTM-eLED+DALI-DT8-AWN QTM-eLED+WD-AWN	QT-CAB-eLED+DALI-DT6-AWN QTM-eLED+DALI-DT6-AWN
ECO System		QTM-eLED(E)
DMX If using DW LED, wattage must be doubled		QZ-DMX
DALI-2: DT6 If using DW LED, wattage must be doubled except for AWN	QT-CAB-eLED+DALI-DT6 QTM-eLED+DALI-DT6	QT-CAB-eLED+DALI-DT6 QT-CAB-eLED+DALI-DT6-AWN QTM-eLED+DALI-DT6 QTM-eLED+DALI-DT6-AWN QZ-DALI-DT6
DALI-2: DT8 If using DW LED, wattage must be doubled except for AWN	QT-CAB-eLED+DALI-DT8 QT-CAB-eLED+DALI-DT8-AWN QTM-eLED+DALI-DT8 QTM-eLED+DALI-DT8-AWN QZ-DALI-DT8	
SCENE App Dimmed	Non-Dim Power Supply with WD App Dongle	Non-Dim Power Supply with SW App Dongle

COMPATIBLE WIRING ACCESSORIES

Q-mini-J

UL Listed, miniature junction box, DRY/DMP (WET rated with silicone)

Q-mini-J5

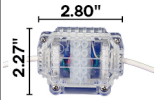

UL Listed, miniature junction box, DRY/DMP (WET rated with silicone)

COMPATIBLE CONTROL ACCESSORIES

SCENE APP DONGLE

Wi-Fi or Bluetooth Connectivity

© 2026 QTL. All rights reserved | 155 Hill St. Milford, CT 06460 | 203-367-8777 | sales@QTL.lighting | www.QTL.lighting

VERS-DROP-SK (10) FOR WARM DIM APPLICATIONS

24VDC Linear Fixtures - Suspended

COMPATIBLE APPS

NFC APP

Q-NFC

Read and write DMX addresses and adjust voltage

VERS-SK

Linear Fixtures - Suspended

- Shop drawings required for run lengths over 8ft
- If no suspension length provided, 36" is standard
- Suspension cable maximum length: 120"
- Suspension cable is field cuttable
- Suspended fixtures over 6ft require additional suspension points. 8ft lengths will bow 0.25" in middle without additional support.
- Any run length over 8' requires inline brackets
- Consult factory for power over aircraft
- Consult factory for custom color of canopy
- Lag Screw is for mounting into drywall, wood, or other types of finished ceilings for non-feed mounting only

POWER FEED SUSPENSION KIT

1 PRODUCT	2 FEED	3 CANOPY SHAPE	4 CANOPY SIZE	5 CANOPY FINISH	6 APPLICATION	7 SUSPENSION CABLE LENGTH (IN)
SK			5"			

Sample Part Number: **SK-SF-RD-5"-WH-JB-36"**

1 PRODUCT

SK	

2 FEED

SF	Single

3 CANOPY SHAPE

RD	Round
SQ	Square

4 CANOPY SIZE

5"

5 CANOPY FINISH

WH	White
BK	Black

6 APPLICATION

JB	Junction Box
TB	T-Bar Mount

JB - mounting bracket only, junction box not included
TB - mounting bracket and junction box

7 SUSPENSION CABLE LENGTH (IN)

36"
120"

NON-FEED SUSPENSION KIT

1 PRODUCT	2 FEED	3 CANOPY SHAPE	4 CANOPY SIZE	5 CANOPY FINISH	6 APPLICATION	7 SUSPENSION CABLE LENGTH (IN)
SK	NF					

Sample Part Number: **SK-SF-RD-5"-WH-JB-36"**

1 PRODUCT

SK	

2 FEED

NF	No Feed

3 CANOPY SHAPE

RD	Round
SQ	Square

4 CANOPY SIZE

2"
5"

5"

5 CANOPY FINISH

WH	White
BK	Black

WH	White
BK	Black

6 APPLICATION

TB	T-Bar Mount
LS	Lag Screw

TB - T-Bar clip only, junction box not included

JB	Junction Box

Mounting bracket only, junction box not included

7 SUSPENSION CABLE LENGTH (IN)

36"
120"

KIT CONTENTS

- 1/16" Steel suspension cable – 36" standard
- Selected canopy
- Cable Gripper
- Cable Coupler

JBOX
- Bracket to mount to junction box (junction box not included)
- Wire strain relief
- Ties for securing electrical cable to suspension cable

T-BAR – feed
- Includes junction box specifically designed for T-BAR applications
- Bracket to mount to junction box
- Wire strain relief
- Ties for securing electrical wire to suspension cable

T-BAR – non-feed
- Bracket to mount to T-BAR (no junction box)

LAG SCREW – non-feed only
- Double ended screw, with a wood thread side and machine thread side
- One piece cable coupler

© 2024 QTL. All rights reserved | 155 Hill St. Milford, CT 06460 | 203-367-8777 | sales@QTL.lighting | QTL.lighting

VERS-SK

Linear Fixtures - Suspended

3 CANOPY OPTIONS

RD - 2" - NF

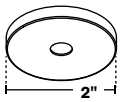

Round
2"
No Feed

SQ - 2" - NF

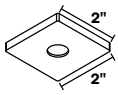

Square
2"
No Feed

RD - 5" - NF

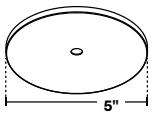

Round
5"
No Feed

SQ - 5 - NF

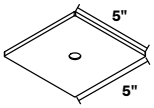

Square
5"
No Feed

RD - 5" - SF

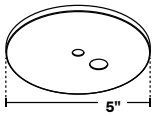

Round
5"
Single Feed

SQ - 5" - SF

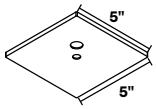

Square
5"
Single Feed

5 CANOPY FINISH

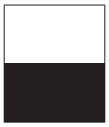

White

Black

JOINTS/CONNECTORS

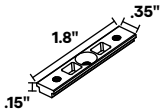

Inline Bracket

6 APPLICATION

TB
Power Feed Kit

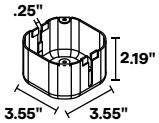

T-Bar Junction Box

TB
Non-Feed Kit

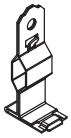

T-Bar Clip

LS

Lag Screw

KIT HARDWARE

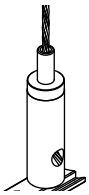

Cable Gripper

Cable Coupler

© 2024 QTL. All rights reserved | 155 Hill St. Milford, CT 06460 | 203-367-8777 | sales@QTL.lighting | QTL.lighting

VERS-SK

Linear Fixtures - Suspended

MOUNTING

- Maximum single fixture length: 98”
- Suspended fixtures over 6ft require additional suspension points. 8ft lengths will bow 0.25” in middle without additional support.
- Shop drawings required for run lengths over 8ft

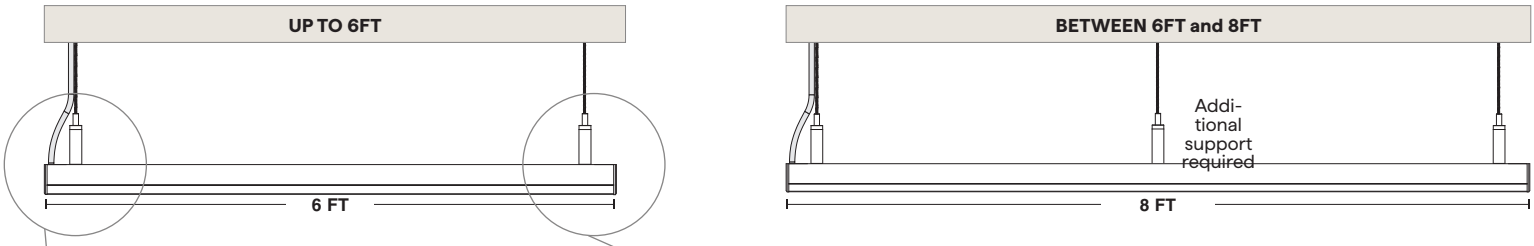

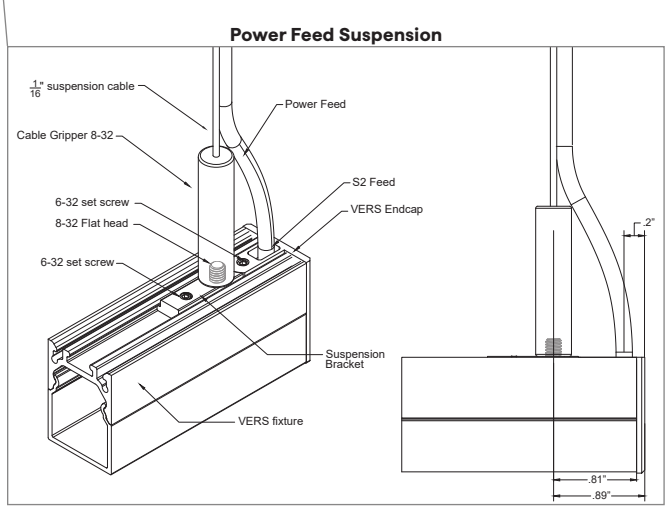

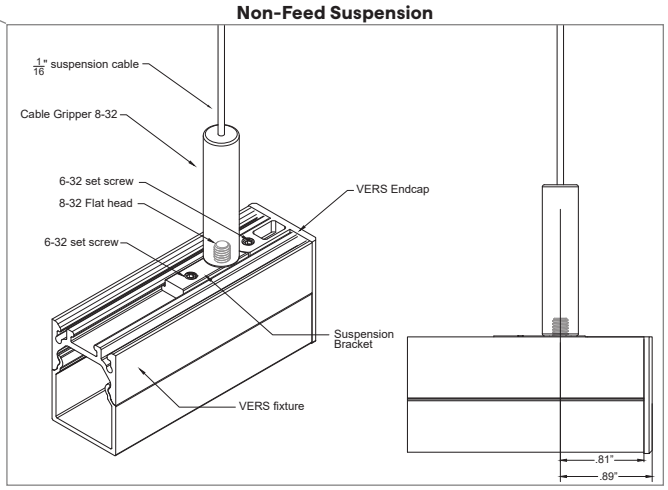

© 2024 QTL. All rights reserved | 155 Hill St. Milford, CT 06460 | 203-367-8777 | sales@QTL.lighting | QTL.lighting

VERS-SK

Linear Fixtures - Suspended

MOUNTING

- Maximum single fixture length: 98"
- Suspended fixtures over 6ft require additional suspension points. 8ft lengths will bow 0.25" in middle without additional support.
- Shop drawings required for run lengths over 8ft

12FT

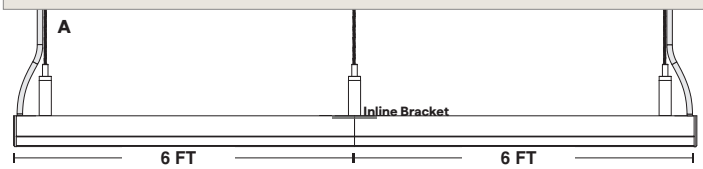

Part number example for a suspended VERS-01 dry rated static white fixture with a diffused lens in 1.5W/ft, 3000K, in a satin finish:

A VERS-10-SK-SW-1.5-30-DRY-DF-N/A-S2-BW-CLS-SV-AWM-SK-ST-144" (1X)
SK-SF-RD-5"-WH-JB-36" (2X)
SK-NF-RD-5"-WH-JB-36" (1X)

BETWEEN 8FT and 16FT

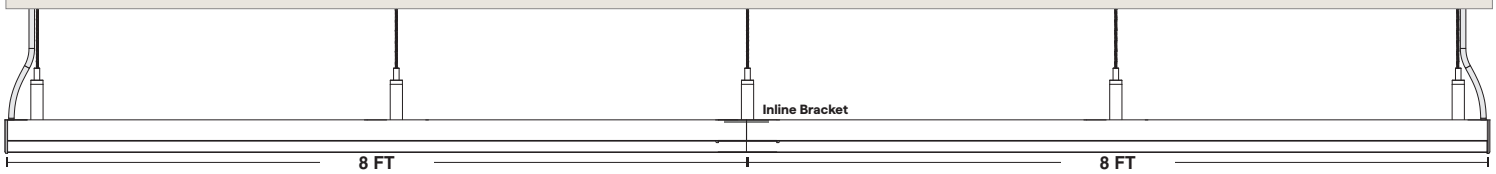

32FT

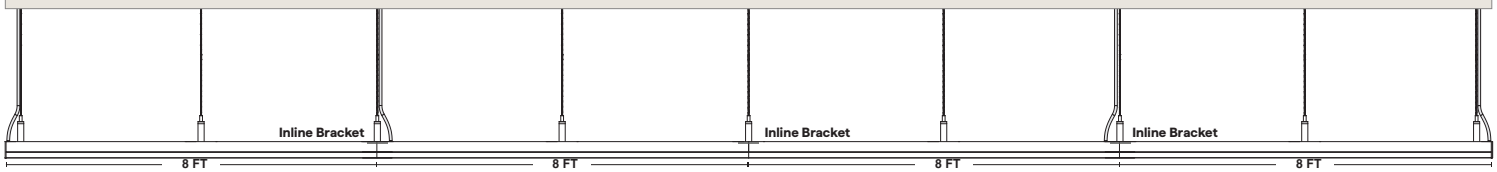

© 2024 QTL. All rights reserved | 155 Hill St. Milford, CT 06460 | 203-367-8777 | sales@QTL.lighting | QTL.lighting

VERS-SK

Linear Fixtures - Suspended

SUSPENSION T-BAR POWER FEED ASSEMBLY

SK-SF-RD-5-**-TB-36

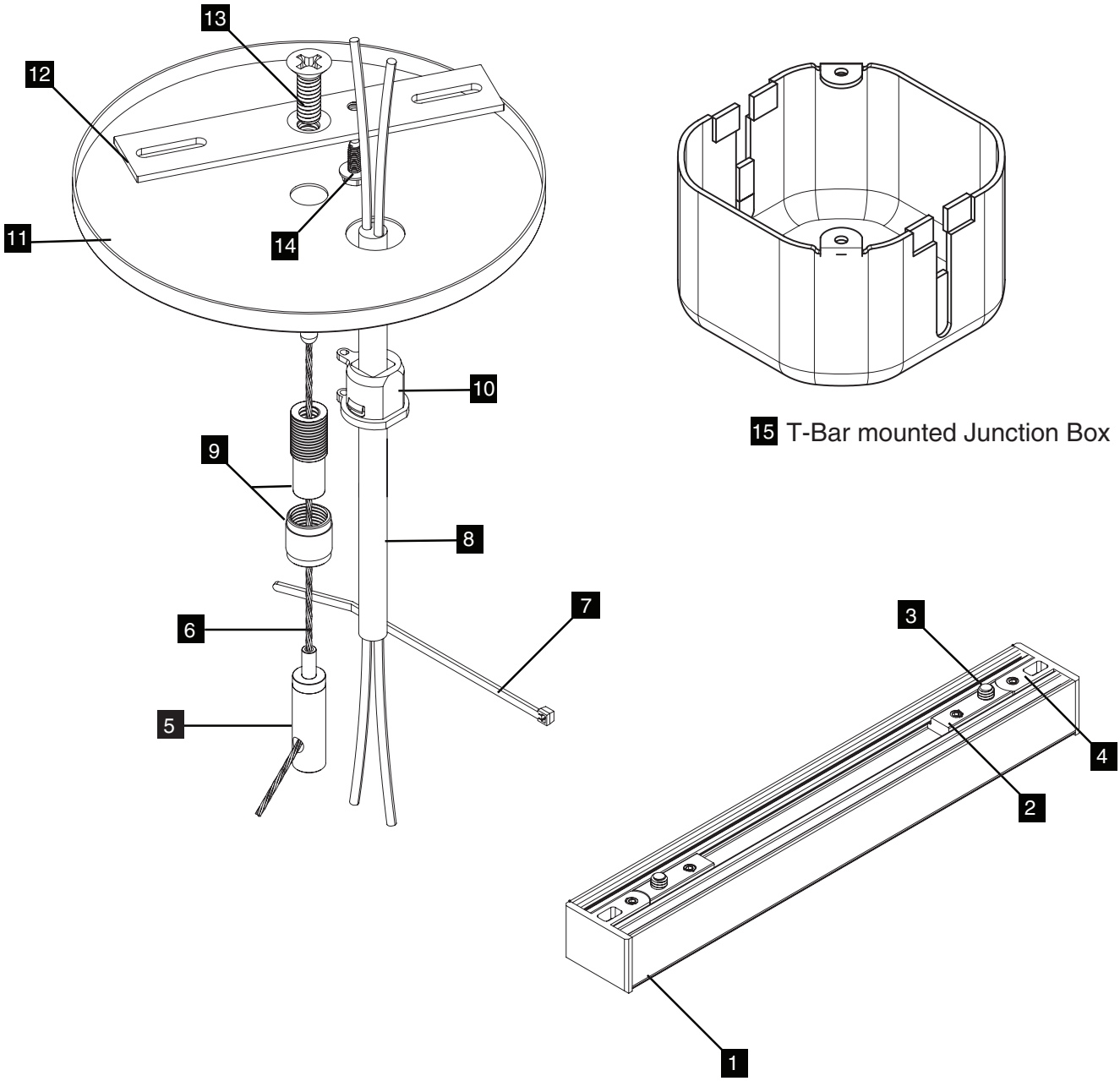

VERS SUSPENSION COMPONENTS

1 VERS	2 Suspension Bracket	3 8-32 Screw	4 Endcap	5 Cable Gripper	6 1/16” Cable	7 Tie
8 Lead Wire	9 Cable Coupler	10 Strain Relief	11 Canopy	12 Crossbar	13 1/4”-20	14 Ground Screw

© 2024 QTL. All rights reserved | 155 Hill St. Milford, CT 06460 | 203-367-8777 | sales@QTL.lighting | QTL.lighting

VERS-SK

Linear Fixtures - Suspended

SUSPENSION POWER FEED ASSEMBLY - TO MOUNT TO JUNCTION BOX*

*JUNCTION BOX NOT INCLUDED

SK-SF-RD-5-**-JB-36

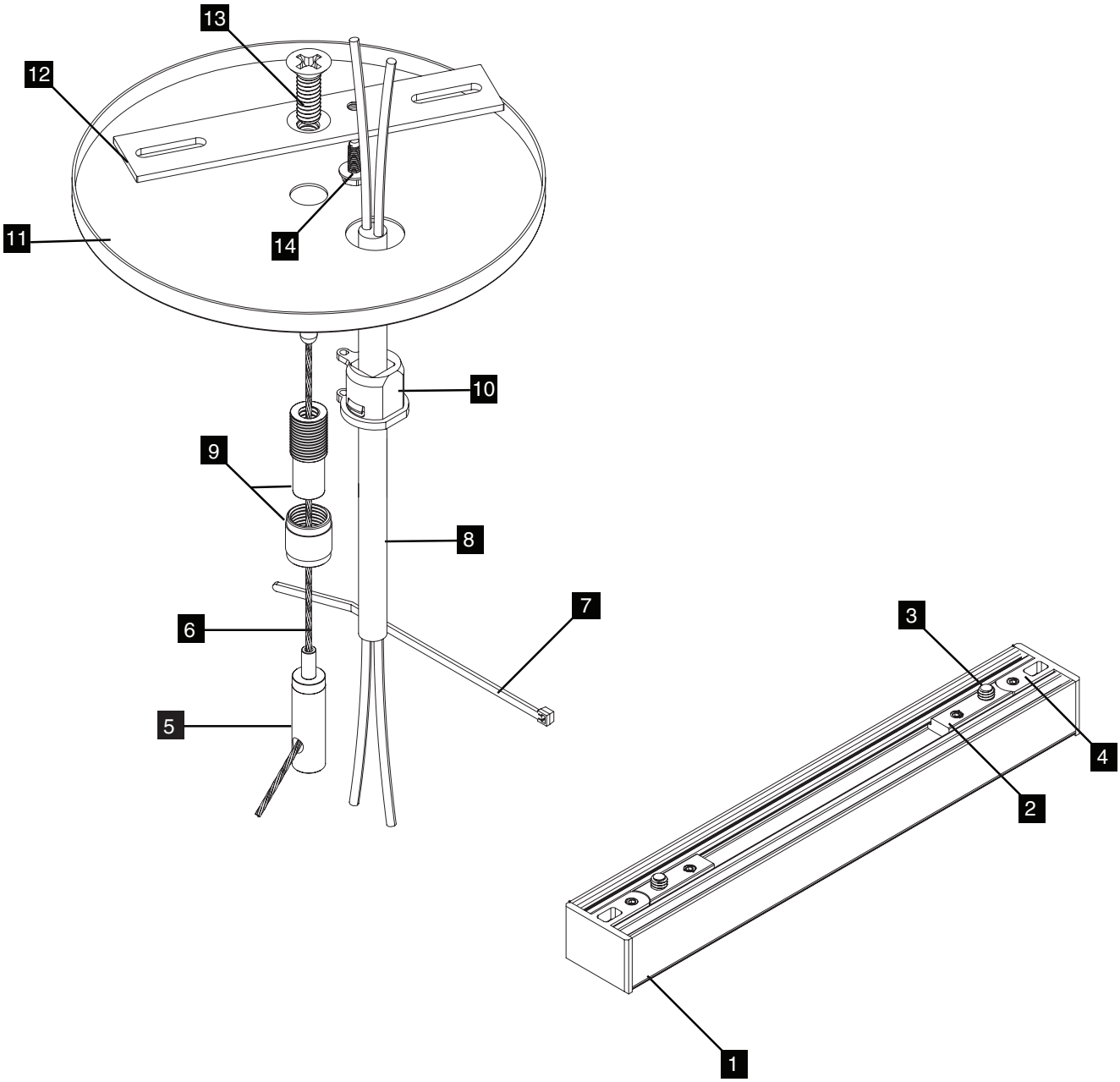

VERS SUSPENSION COMPONENTS

1 VERS	2 Suspension Bracket	3 8-32 Screw	4 Endcap	5 Cable Gripper	6 1/16” Cable	7 Tie
8 Lead Wire	9 Cable Coupler	10 Strain Relief	11 Canopy	12 Crossbar	13 1/4”-20	14 Ground Screw

© 2024 QTL. All rights reserved | 155 Hill St. Milford, CT 06460 | 203-367-8777 | sales@QTL.lighting | QTL.lighting

VERS-SK

Linear Fixtures - Suspended

SUSPENSION T-BAR NON-FEED ASSEMBLY

SK-NF-RD-2-NF-*-TB-36

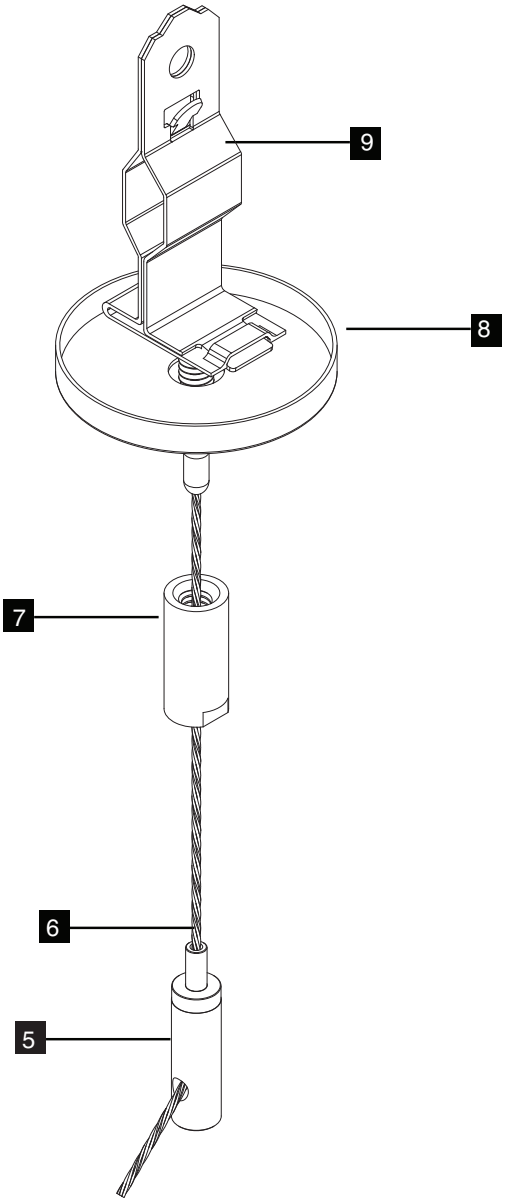

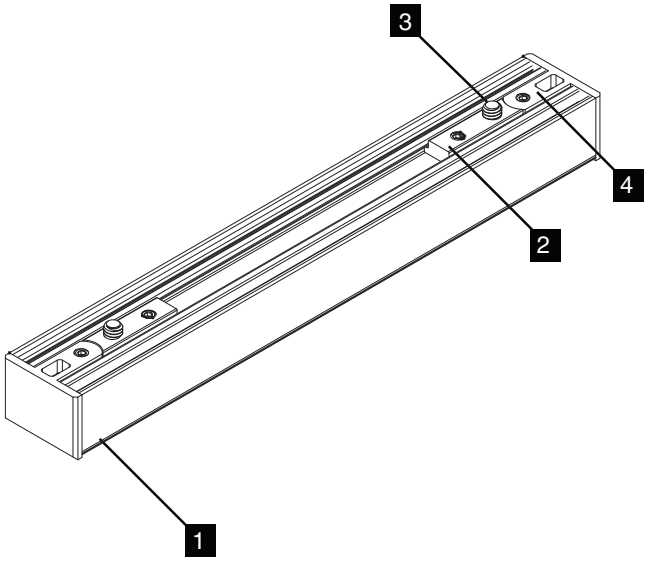

NON-POWERED FEED KIT

1 VERS	2 Suspension Bracket	3 8-32 Screw	4 Endcap	5 Cable Gripper
6 1/16” Cable	7 Cable Coupler	8 Canopy	9 T-Bar Clip	

© 2024 QTL. All rights reserved | 155 Hill St. Milford, CT 06460 | 203-367-8777 | sales@QTL.lighting | QTL.lighting

LAG SCREW NON-FEED ASSEMBLY

SK-NF-RD-2-NF-*-LS-36

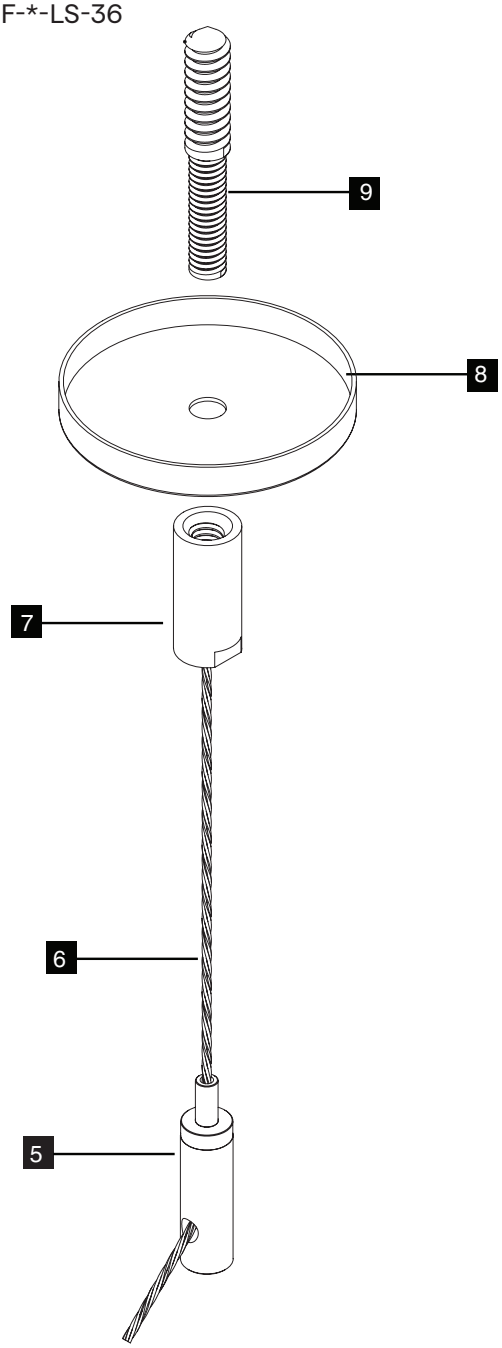

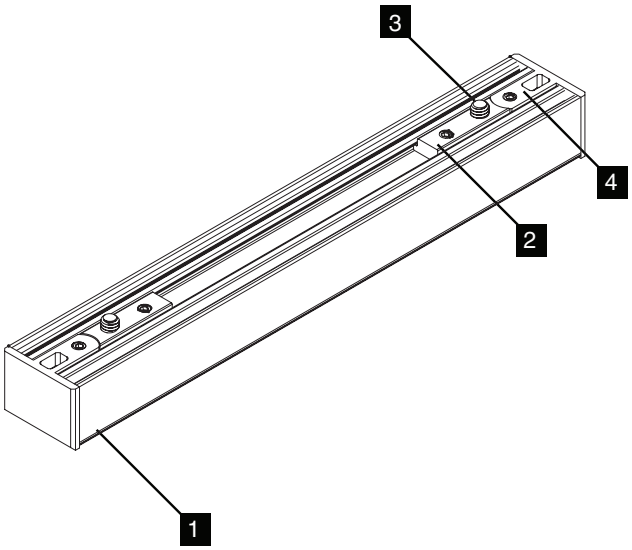

NON-POWERED FEED KIT

1 VERS	2 Suspension Bracket	3 8-32 Screw	4 Endcap	5 Cable Gripper
6 1/16” Cable	7 Cable Coupler	8 Canopy	9 Lag Screw	

© 2024 QTL. All rights reserved | 155 Hill St. Milford, CT 06460 | 203-367-8777 | sales@QTL.lighting | QTL.lighting